sBBN & The Lithium Problem

Author: Javier Reina Gil
Facultat de Física, Universitat de Barcelona, Diagonal 645, 08028 Barcelona, Spain.

Abstract: The success of Big Bang Nucleosynthesis (BBN) relies on its ability to predict the light elements primordial abundances. The predictions can be made computationally taking advantatge of nuclear physics. However, the comparison of predictions and observations is far from trivial because of the post-BBN evolution. Any tensions between predicted/observed abundances have to be discussed and, maybe, new physics is needed. The corrections to the Standard Model (SM) constitute the Non-Standard Model (nSM). It uses the constraints set by the observations to fix new parameters of the model, in order to recover the observed abundances.

I. INTRODUCTION: SBBN

A. Evolution Of The Early Universe

The SM of cosmology describes the newly born universe as a hot, dense medium where the General Theory of Relativity, the Cosmological Principle and the whole frame of the SM of Particle Physics, in addition to Thermodynamics, are applicable.

From these hypotheses, we can write the *time-temperature equation* to relate the age of the universe with its temperature. This way we are able to determine the time-window where proceses occur. It reads:

$$t \approx 1s \left(\frac{1MeV}{k_B T}\right)^2 \tag{1}$$

B. Baryogenesis & Nucleon Freeze Out

We will consider the universe as plasma made of nucleons, which are not relativistic, since their rest mass is $\sim 10^3\ MeV$. Then, we are in the position to treat proton and neutron as one particle that obeys a Maxwell-Boltzmann distribution with two levels. The populations are:

$$\frac{N_n}{N_p} = \left(\frac{m_n}{m_p}\right)^{3/2} \exp\left(-\frac{(m_n - m_p)c^2}{k_B T}\right) \tag{2}$$

Since $(m_n - m_p)c^2 = 1.3\ MeV$, the equilibrium at $k_B T \gg 1.3\ MeV$ will be of 1 to 1. As the universe gets cooler the state of lower mass becomes more favoured. Finally, at $k_B T = 0.7\ MeV$, the weak interaction can't hold the reactions

$$\nu_e + n \longleftrightarrow p + e^-$$
$$p + \bar{\nu}_e \longleftrightarrow e^+ + n$$

in equilibrium any longer, and the ratio N_n/N_p "freezes out" fixed, at 1/6. From now on, the neutron starts to decay, since it is a free, unstable particle, with a mean life-time of $\sim$881.5 s. The number 1/6 is essential to determine the light elements abundances.

C. Synthesis Of The First Nuclei

Every nuclear fusion needs a light element to tie it up, in order to form new heavier nuclei. Hence, every chain of reactions goes through deuterium (see next figure). It is, then, a key element in BBN.

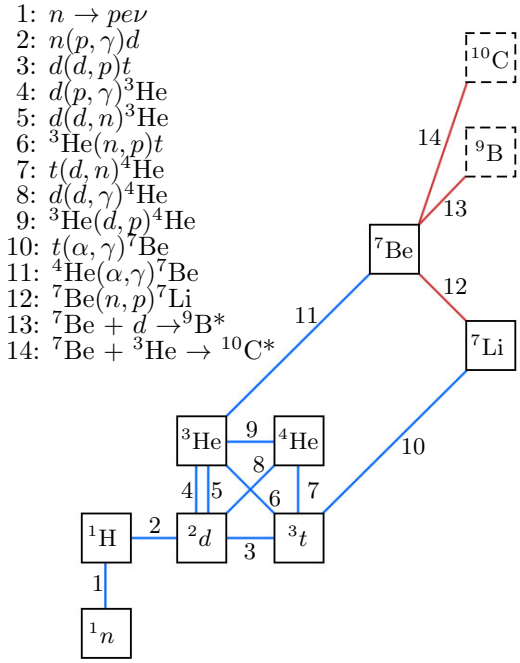

FIG. 1: Simplified BBN nuclear network. The red ones will be referred to in §V.B. Notice that every reaction needs d to have being created.

Although the reaction $p+n \leftrightarrow d+\gamma$ occurs continuously, the great amount of present photons and their high energies destroy every nucleus formed, given its weak binding energy ($\sim 0.22\ MeV$). This means that we need a significantly cooler universe: $k_B T \sim 0.07\ MeV$ [3] to add a significant amount of deuterium and thus allow further reations to start. Joining nuclear theory and some inputs from cosmology, it is possible to compute the *predicted primordial abundances* of the light elements.

In the SM it is possible to constrain every abundance in function of one parameter: the proportion of photons to barions. An excess of photons would shift to the left the reaction $p + n \leftrightarrow d + \gamma$ and reduce the production of d.

The corresponding variable is $\eta = \frac{N_b}{N_\gamma}$. It is convenient to introduce $\eta_{10} \equiv 10^{10}\eta$

The so-called *BBN code* gives the results that we can see as solid curves in FIG. 2, in the usual notation: P meaning *primordial*; capital Y is reserved for helium-4 (the mass fraction, instead of the number ratio, is used there); every abundance is refered to that of hydrogen.

II. MESUREMENTS OF PRIMORDIAL ABUNDANCES

Mesuring the abundances set at BBN ($z \sim 10^{10}$) is out of reach. In fact, we can only mesure reliably at $z \lesssim 3$. The post-BBN evolution of the universe has modified the chemical abundances, so the observed ones are not, in general, the primordial ones. However, it is possible to extrapolate to $Z \to 0$ [18].

Right below, there is a summary of the nuclei formed during the fast process of BBN and their observed abundances (from [2]).

• DEUTERIUM. Its low binding energy makes its post-BBN evolution simple and monotonic: it is always destroyed as it cycles into the stars. Thus, any observed value for D is a lower bound to its primordial abundance. This, and the strong relationship between y_{DP} and η (as seen in FIG. 2), is why deuterium is often called the *barymeter of choice*.

A[D] is mesured at high redshift ($z \sim 3$), in neutral hydrogen clouds of low metallicities quasars, by comparision of the lines due to D with the larger absorption due to the mass-1 isotope of hydrogen. Since deuterium and hydrogen have almost identical absorption spectra [10], the data have to be very well chosen. That's why there are really few realiable observations (~ 7), and they show important spreading [1].

Although more data are needed, there is a robust value for A[D]:

$$y_{DP} = 2.82 \pm 0.21$$

• HELIUM-4 has also a monotonic evolution. In this case, the post-BBN stellar nucleosynteshis increases its abundance ($Y_0 > Y_P$). The primordial abundance of ^{4}He is inferred from data provided by helium and hydrogen ionized hydrogen in low-metallicity extragalactic HII regions.

The accuracy (not precision) of its measured abundance is in question and there is a lot of discussion about how we shoud treat the uncertainties, which are model-dependent. It is necessary to correct the values obtained by a factor related to the amount of ionized helium (icf).

The value usually adopted is:

$$Y_P = 0.249 \pm 0.009$$

• LITHIUM-7 has been observed only in the absorption spectra of metal-poor stars in the halo of our Galaxy, which are, of course, ideal for probing the relic abundances.

Spite & *Spite* (1982) observed a flat region, a plateau, in the plot of A[Li] vs. Z (metallicity). Since lower Z means older generation and the data are uncorrelated, they had to be watching a nearly primordial composition and, hence, the primordial value for y_{Li}.

As lithium is one of the last elements created in the BBN, its abundance is very low ([Li/H]$\sim 10^{10}$) and the usual way to express it is [Li]$\equiv$ 12 + Log(Li/H). A relation like the generally adopted $\frac{Li}{H} = y_{Li} = (1.23^{+0.68}_{-0.32}) \times 10^{-10}$ yields:

$$[Li]_P = 2.1 \pm 0.1$$

III. MESUREMENT OF THE BARION TO PHOTON RATIO

The barion abundance, η, can be mesured with high precision techniques. The method consists (roughly) in using the WMAP data on the cosmic background of microwaves. The temperature and polarization of the CMB encode lots of cosmological information. Among this information, the most accurate value of η obtained until now is:

$$\eta_{10} = 6.19 \pm 0.15 \text{ [6]}$$

The amount of barionic matter in the universe is always taken as constant in time, as well as that of photon's. Even if we take into account the conversion of matter into energy, due to stellar processes, the initial amounts were huge enough to consider the changes as null. The ratio is constant since the epoch of the matter-antimatter annihilation, in the first fractions of second of the universe. So, during the BBN we would have measured the same value for η as we measure today.

IV. OBSERVATIONAL VS PREDICTED ABUNDANCES

As the barion to photon ratio is closely related to the production of elements in the BBN, it is possible to express the predicted abundances as a function of η. In other words, we can relate univocally (lithium is double-valued in η due to the shape of the curve; see FIG. 2) a value of each element abundance to a value of η (within the quoted errors)[5]. We will name η_e the barion to photon ratio for the element e. The expressions found are [4]:

$$y_{DP} \equiv 10^5(\text{D/H})_P = 45.7(1 \pm 0.06)\eta_D^{-1.6}$$
$$Y_P = 0.2381 \pm 0.0006 + 0.0016\eta_{He}$$
$$y_{Li} \equiv 10^{10}(\text{Li/H})_P = 4.82(1 \pm 0.10)(\eta_{Li}/6)^2$$

These relations are used to check the validity of our theories, as they constitute a link between observational and predicted values. Hence, every disagreement has to be explained within the present theorical frame. If, even

enlarging our systematic errors, it's not possible to do so, it has to be explained from new hipotheses.

The clearest way to show the agreement/disagreement between observational and predicted abundances of the light elements is visually. FIG. 2 and 3 show it.

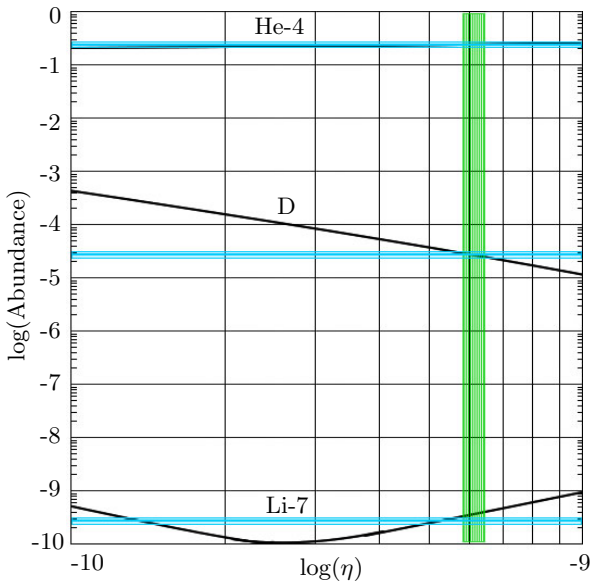

FIG. 2: The curves represent the predicted primordial abundances as functions of η, computed with the BBN code. The green/blue regions correspond to the 1σ experimental uncertainties of the observations.

Note the very good agreement in the case of helium and deuterium. The case of lithium can be seen in more detail in FIG. 3.

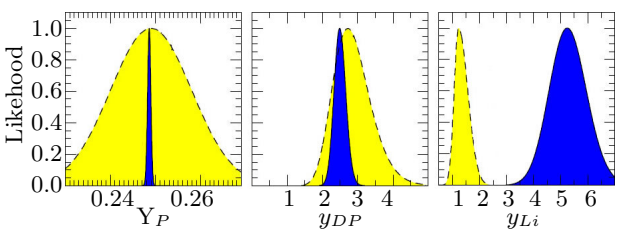

FIG. 3: Comparison of predictions and observations. *Blue curves*: theory likehoods computed with the BBN code for the input $\eta = 6.19$. *Yellow curves*: observational likehoods based on section II.

The concordance we see for He-4 and deuterium in FIG. 3 is ashtonishing, and represents a triumph of the Big Bang Theory. The third element, Li-7, doesn't agree with the predictions by a factor $Li_{WMAP}/Li_{obs} = 2.4{-}4.3$, depending on the treatment of the systematic errors, which corresponds to a $4.2 - 5.3\sigma$ discrepancy. The disappearance of $\sim$two thirds of the cosmic lithium is known as the *Lithium-7 Problem*.

V. DISCUSSION ON THE *LITHIUM PROBLEM* IN THE SM

For some decades, the mismatch of lithium didn't worry almost anyone, because it might be explained via uncertanties. Nowadays, the precision (not accuracy!) of the mesurements has clearly exposed the disagreement and it has to be solved.

There are several ways to try to account for the Lithium Problem, and all of them can be classified in three classes:

• Astrophysical. They wonder about the way the data are taken and about the validity of stellar models.

• Nuclear. The influence of wrong measured lifetimes, unknown reactions ... may alter the flow into and out of mass-7.

• Alteration of the SM. Some new particle, maybe hidden within the dark matter, could have modified A[Li] after the BBN.

A. Astrophysical

Two astrophysical explanations will be presented here, concerning the low observed abundances of lithium in the halo stars.

The first potential source of error are the systematic ones, due to the ionization of ^{7}Li. The only accessible absorption line for ^{7}Li (670.8 nm) is sensitive only to neutral Li^0, but in the halo stars one expects to find mostly ionized Li^+, so it requires an *icf*, just like the case of helium-4. The correction depends exponentially on temperature, which precise determination is a non-trivial matter. However, it does not seem to be the solution to the Lithium Problem [9].

The other astrophysical potential weakness comes from the Spite plateau. If we are able to find any wrong steps in the reasoning "*the Spite plateau corresponds to the primordial abundance because there is no correlation between A[Li] and metallicity, thus the material of the surface of the stars in the plateau has not been processed, so this material is primordial*", then the Lithium Problem **could** be solved by astrophysical arguments.

Lihium-7 is destroyed at relatively low temperatures ($\gtrsim 2.6 \times 10^6\ K$). These temperatures are not proper of the surface of halo stars, but it is reachable in their interior.

On the one hand, there is general agreement that for this kind of stars the convective layers are shallower than in hotter stars. On the other hand, since the halo stars have lived for many *Gyr*, they have had ample time to modify substantially their surface composition. These two opposite factors make difficult to stimate the uncertainties in A[Li].

Another fact reinforces the validity of the reasoning of *Spite & Spite*: the presence of ^{6}Li in the plateau. As this isotope is more weakly bound than its heavier mass-7 brother, its presence may imply that the surface of the stars in the plateau have not suffered significant mixing due to convection.

If there were no lithium-6 in the plateau, a purely astrophysical solution to the Lithium Problem **would** be possible. Consequently, it is reasonable that the Lithium Problem needs help from some other source.

B. Nuclear

Now let's consider that the observed lithium abundances are correct and that the value for η from WMAP is also well determined; then the mismatch must come from the predictions, i.e. the BBN code. The code is robust, since it rests on a very well stablished framework. Then the only possible source of miscalculation would have to come from nuclear physics, either from underestimating the quoted errors in the cross sections (which are relatively easy to measure but hard to normalize) of important reactions, or through ignoring reactions thought naïvely to be unimportant.

To examine the first option let's watch FIG. 2. The predicted abundance of ^{7}Li presents a valley caused by its two ways of being produced: at low η's the main contribution comes from the fusion of tritium, $t(\alpha,\gamma)^7$Li, but near $\eta \sim 6$ the dominant reaction giving lithium is ^{7}Be$(n,p)^7$Li, which is highly sensitive to ^{4}He$(\alpha,\gamma)^7$Be in the way that the lower the cross section, the lower the beryllium production, and hence lithium's. But the cross section of ^{4}He$(\alpha,\gamma)^7$Be is accurately known, since our Sun uses that reaction to produce its neutrino flux, and so the possible wrong normalization is excluded.

Other corrections have also been studied recently to bridge the gap, like weak rates (which determine the $n \leftrightarrow p$ equilibrium) and Coulomb screening [7]. None of them has resulted to be large enough.

Resonances are the last nuclear issue to consider: some authors [11] state that, since lithium is mostly generated by ^{7}Be (see above), if we found some way to destroy beryllium, perhaps that would lower the resultant lithium abundance in the proportion required to fit the observations. The way [11] suggests is through the enhancement of the resonance ^{7}Be$(d,\gamma)^9$B*, which would burn beryllium into ^{9}B* rather than into lithium. This effect would lower the high-η hill of FIG. 2 and thus potentially solve the Lithium Problem.

The systematic study of the known resonances related to production of the light nuclei has yield two other candidates, with ^{10}B* and ^{10}C* involved. Up to now, these three resonances are the last possible solutions that would alleviate the discrepancy of 4.2-5.3σ within the SM. They are thus being studied at the present (see [14] for a recent review).

VI. BEYOND THE STANDARD MODEL

If none of the mentioned proposals is able to explain where are the ∼two thirds of the predicted lithium, the physicists will have to question the assumptions of §I.

Here I will discuss three of the nSBBN-related ideas that have been considered of interest, but the list could be longer:

A. Dark Matter Decay

Today, one popular and physically well-motivated possibility is that dark matter consists of weakly interacting massive particles (WIMPs). It is possible that these particles were the product of the decay of primitive dark matter unstable particles, named X. In this case, if the decay happened during or after the BBN, the injection of energy produced in that moment could alter the production of light elements, as these particles are thought to be very massive ($\sim GeV$) and hence their daughters unthermal.

In a similar way as it is done for the computation of the solid curves in FIG. 2, it is possible to compute light elements abundances as functions of the decay time of an hipothetical particle X, τ_X, and its pre-decay abundance, defined as $\zeta_X = \frac{m_X n_X}{n_\gamma} = m_X \frac{n_X}{n_b}\eta$. The resulting plot is:

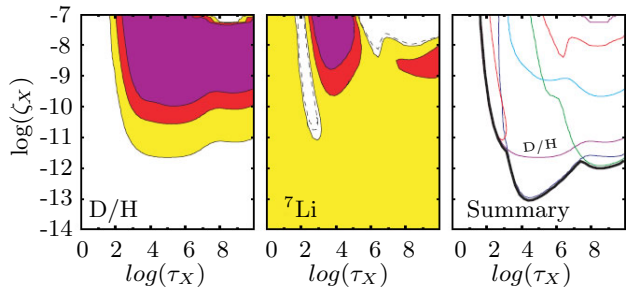

FIG. 4: with $\zeta_X \sim GeV$ and $\tau_X \sim s$. Effect of nonthermal particle injection for hadronic decays. The colorated areas indicate regions where the predicted abundances disagree with observations.

Inn the second panel there is a region between 10^2 s $< \tau_X < 10^3$ s where the predicted abundance for lithium agrees with observations. Bad news are that deuterium's doesn't (see first and third panel).

B. Non-Standard Cosmologies

It is of interest to question if the answer goes necessarily through nuclear and particle physics, or maybe the Lithium Problem points to Non-Standard Cosmology. In fact, there are no observations made of several elements in a common region nor observations made of the same element in several places in the universe. In particular, [13] suggests the existence of *Gpc*-scale inhomogeneities (σ) that could make the abundances fit the way we see in FIG. 5.

The simplest interpretation of this theory is that we live in a region where the matter density is significantly less than the density of that of the universe on super-Hubble scales. This suposes the violation of the Cosmological

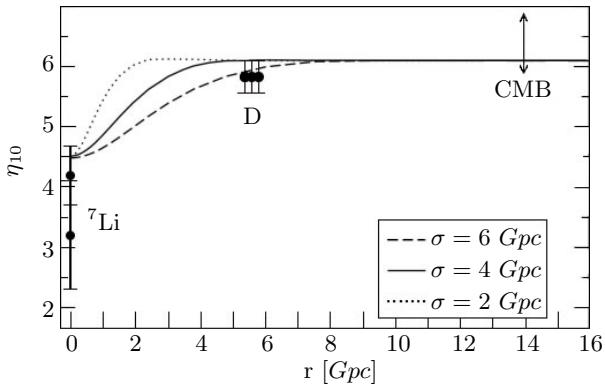

FIG. 5: The bars show the actual mesurements and the distance at which they were done. The curves represent the evolution that η_{10} has (in this hypothesis) with distance to the Earth.

Principle, but doesn't cause collateral damages (i.e. no cosmological phenomenon stops being explicable).

C. Changing Fundamental Constants

Variations with time are expected in the value of the fine-structure constant in the frame of some unified theories [17]. We can test fundamental constants in a wide range of spacetime regions thanks to multiple atomic transitions in metals of high z QSO. Normally the values found are independent of the region studied, but some data suggest variations at $z \sim 3$, showing $\delta\alpha_{EM}/\alpha_{EM} \simeq -0.5 \times 10^{-5}$ at the 5σ level [12], consistent with no variation.

The approach of studying the BBN response to variations in some constants is specially succesful when studying the deuteron binding energy, B_D. Some studies [15] are optimistic that altering the binding energy can bring A[Li], both observed and predicted, into concordance without altering Y_P or y_D beyond observed errors.

VII. CONCLUSIONS

The age of precision has come to Cosmology, naking one of the major weakness of the Big Bang Theory: the discrepancy between the predictions of the light elements primordial abundances and the observed ones.

Recent studies are discarting day by day nuclear solutions to the disappearance of the cosmic lithium [14][8], which pushes the authors to consider new ways to fit observed and predicted values for A[Li].

Dark matter is a potential source of energy injection (via decays) that could have retarded the production of lithium. But it still doesn't seem to be the solution to our discrepancy, since this would affect also the abundance of our baryometer, bringing it away from the robustly stablished y_{DP}.

One of the last theories exposed here proposes the existence of inhomogeneities in the scale of $\sim$ *Gpc*. This would not solve the Lithium Problem *per se*, but explain why do we THINK that there is a problem with lithium.

Among all the theories exposed in this work (some others are just out of the reach of this work, invoking Supersymmetry, for example), the author thinks that the most promising is that of *Gpc*-scale inhomogeneities. Every other has had the chance to be challenged and few succes has come from them. Even the change in fundamental constants have to be followed by deuterium destruction and new freedom degrees (see [16]) to solve the Lithium Problem, which seems excessively *ad hoc*.

But the acceptance of inhomogeneity is not aesthetic because it makes us privileged observators. Are we going to let aesthetics be in front of Occam's Blade and discard this hipothesis because it breakes the copernican principle? Perhaps it is ample a reason but, as Marco Regis & Chris Clarkson say in [13], "*filling in points on this graph* (FIG. 5) *will test this theory*".

Acknowledgments

First of all, I would like to thank my tutor, Ramon Canal Masgoret, for his support during the whole semester and helpfull introductory lesson, as well as the unestimable fact that he presented me key papers written by professor Gary Steigman (*The Ohio State University*).

I am very grateful to my girl, Jone, who took care of me and the correct use of the English in this work. BBN did a great job with her.

And of course my parents, who did a not fully-wasted work in DNA arrangement. I would have not been able to do anything without them. Literally.

[1] Steigman G. (2007), arXiv:0712.1100
[2] D Fields B. (2012), arXiv:1203.3551v1
[3] Cepa J. *Cosmología Física* (2007)
[4] Steigman G & Kneller J.P. (2004), arXiv:0406320v1
[5] Krauss L.M. & Kernan P.J. (1994), arXiv:9408023v3
[6] Komatsu E. et al. (2010), arXiv:1001.4538v3
[7] Smith C.J. & Fuller G.M. (2009), arXiv:0905.2781v2
[8] Boyd R.N. et al. (2001), arXiv:1008.0848v1
[9] Hosford A. (2008), arXiv:1004.0863v1
[10] NIST Atomic Spectra Database (Online v5.1)
[11] Cyburt R.H. & Pospelov M. (2009), arXiv:0906.4373v1
[12] Uzan, J-P. (2002), arXiv:0205340v1
[13] Regis M. (2010), arXiv:1003.1043v2
[14] Hammache, F. (2013), arXiv:1312.0894
[15] Coc A. et al (2006), arXiv:0610733
[16] Coc A. et al (2012), arXiv:1206.1139
[17] Flambaum V. (2007), arXiv:0705.3704v2
[18] Nissen, P.E. (2012), arXiv:1205.4122v1